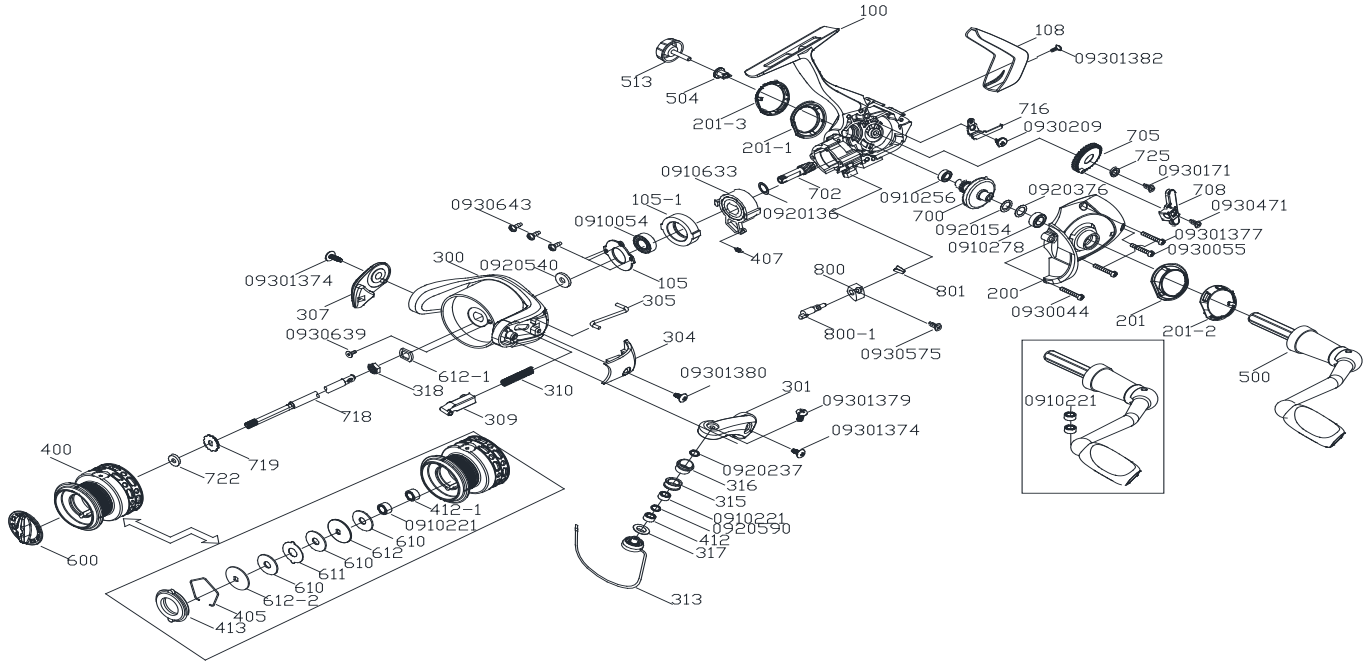

PD-40 PARTS LIST

KEY NO	PARTS NO	PARTS NAME	KEY NO	PARTS NO	PARTS NAME
100	21004133	Mian body	700	27000324	Drive gear
105	21050027	Pinion bearing fixed plate	702	27020835	Pinion gear
105-1	21056578	Pin. bearing fixed plate	705	27050105	Transmission gear
108	21087071	Cap	708	27080095	Oscillating slider
200	22004374	Side plate	716	27160007	Oscillation slider plate
201	22010025	Side plate decoration	718	27180704	Main shaft
201-1	22010027	Main body decoration	719	27190025	Click gear
201-2	22010411	Side plate decoration	722	27220009	Click gear washer
201-3	22010472	Main body decoration	725	27250020	Transmission gear bushing
300	23004890	Rotor	800	28000241	Anti-reverse/anti-re lever
301	23011926	Bail arm	800-1	28000322	Anti-reverse/anti-re lever
304	23042610	Bail arm cover	801	28010024	Anti-re lever spring
305	23050146	Kick lever	0910633	0910633	Ball bearing
307	23071531	Bail holder	0910256	0910256	Ball bearing
309	23090002	Bail arm slider	0910054	0910054	Ball bearing
310	23100005	Compression spring	0910278	0910278	Ball bearing
313	23131574	Bail wire assy.	0910221	0910221	Ball bearing
315	23150086	Line roller	0920540	0920540	Washer
316	23160014	Line roller bushing	0920376	0920376	Washer
317	23170024	Line roller washer	0920154	0920154	Washer
318	23180005	Rotor nut	0920590	0920590	Washer
400	240014701	Spool assy.	0920237	0920237	Washer
405	24050042	Drag washer retainer	0920136	0920136	Washer
407	24070009	Extension spring	0930044	0930044	Screw
412	24120054	Spool bushing	0930575	0930575	Screw
412-1	24120021	Spool bushing	0930171	0930171	Screw
413	24130009	Waterproof retainer	09301382	09301382	Screw
500	25005853	Spool assy.	0930209	0930209	Screw
504	25040004	Handle screw cap washer	09301377	09301377	Screw
513	25130830	Handle cap	0930471	0930471	Screw
600	26002995	Drag knob assy.	0930055	0930055	Screw
610	26100109	Drag washer	09301379	09301379	Screw
611	26110005	Eared washer	0930643	0930643	Screw
612	26120006	Key washer	09301380	09301380	Screw
612-1	26120054	Key washer	09301374	09301374	Screw
612-2	26120007	Key washer	0930639	0930639	Screw

209CAB09016401